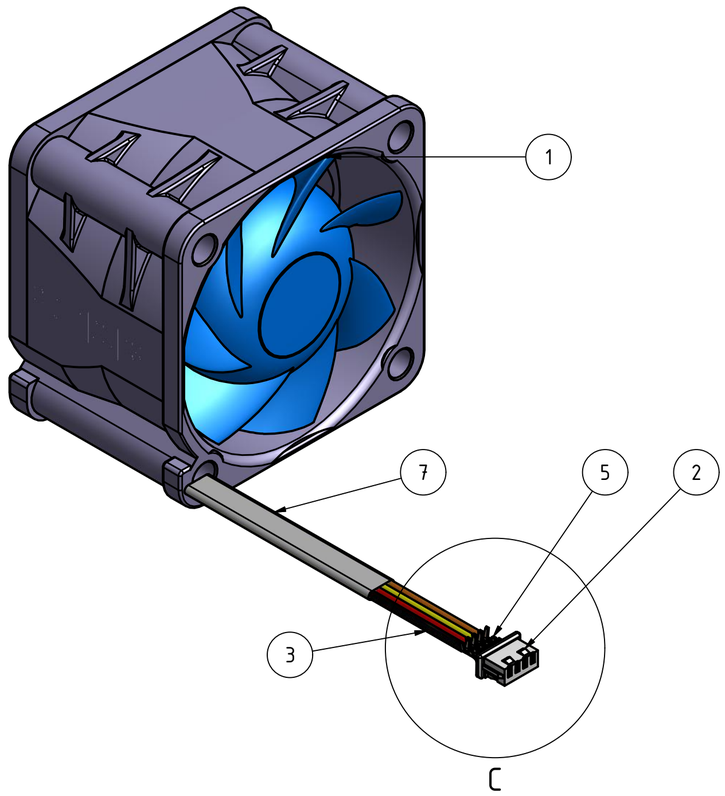

C (4 : 1)

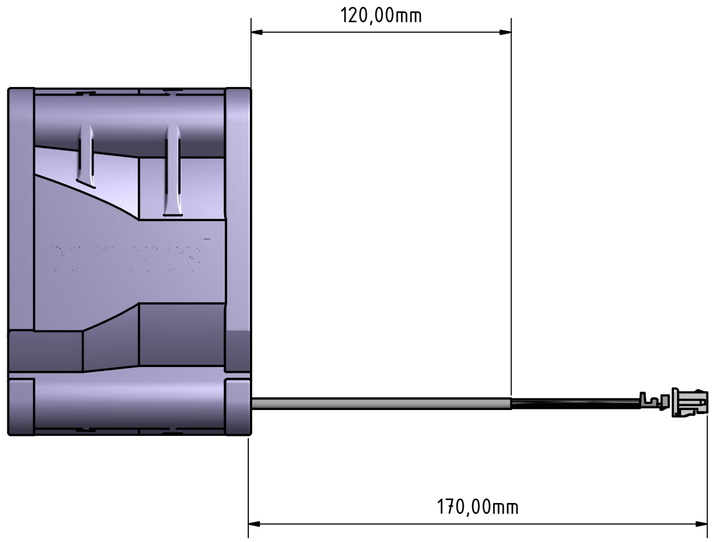

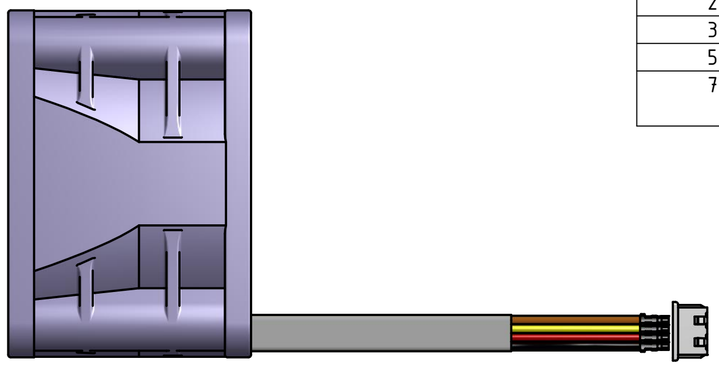

partlist			
object	numbers	partnumber	description
1	1	San Ace40 9GA0412P3H01	Fan
2	1	Molex 510210400	1.25mm Pitch PicoBlade™
3	4	preassembled	Fancable
5	4	Molex 50058-8100	crimpterminal
7	1	HellermannTyton Art-No: 308-30600	Heatshrink tube

Brown
Yellow
Red
Black

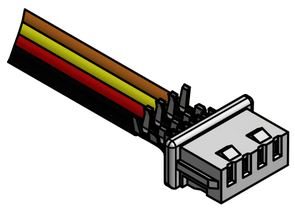

watch the orientation of the connector!

					Datum	Name
				Gezeichne	27.10.2016	schmoelb
				Kontrolliert		
				Norm		
Status	Änderungen	Datum	Name			

Fan assembly

1
A2